99F-38(UIUC-ENG-99-7009)

Machine Vision-Based High-resolution Weed Mapping And Patch-Sprayer Performance Simulation

L. Tang, L. F. Tian, B. L. Steward

Department of Agricultural Engineering, University of Illinois at Urbana-Champaign
1304 W. Pennsylvania Avenue, Urbana, IL 61801

ABSTRACT

An experimental machine vision-based patch-sprayer was developed. This sprayer was primarily designed to do real-time weed density estimation and variable herbicide application rate control. However, the sprayer also had the capability to do high-resolution weed mapping if proper mapping techniques being integrated. Two weed mapping methods were developed. One is GPS signal-based off-line weed mapping; another one is radar distance measurement-based on-line weed mapping. The high-resolution weed maps provided evidence to further support the patch-spraying concept. Randomly sampled field images were processed with different nozzle control zone sizes and thresholding methods to simulate sprayer performance. Fundamental system design strategies regarding these two factors were obtained through simulation. System design techniques, including system constructions, weed sensing and crop-row detection algorithms were reported.

INTRODUCTION

In order to maintain high crop yield, weed control is essential. Herbicide application is typically applied uniformly though research has shown that weeds are highly aggregated and tend to occur in clumps or patches which will also remain relatively stable in size and location year by year[1-3]. A real-time weed sensing and control patch sprayer has potential to reduce the amount of herbicide applied to agronomic fields when compared with uniform application method. This reduction would not be only economically advantageous but also has environmental benefit. Therefore, if there is a sophisticated herbicide delivery system, which can do patch-spraying for post-emergence herbicide application in real-time, and moreover, is capable of creating a weed map at the same time, and use this weed map to handle pre-emergence herbicide application next season, chemical would be more effectively applied. This herbicide application would result in lower environmental loading and increased profitability for producers.

There are two approaches to reduce the herbicide use. One is to apply herbicide to only weed-infested areas; another approach is to apply some base level treatment to the whole field and increase the dose when patches are encountered[1]. With real-time weed sensing patch spraying system or the availability of a high resolution weed map, these two approaches could be combined to apply herbicide in a variable fashion resulting in an overall reduced herbicide applied while maintaining expected weed control. Herbicide efficacy has been shown to be related to weed density[4-5]. Williams et al.[5] did research on spatially varying application rate according to weed density, and found that weed control has no significant difference between reduced and full rate populations.

Machine vision-based weed sensing shows promise because it not only utilizes spectral information, but also spatial and textural information. Researchers[1,6] have considered selective sprayers with real-time weed sensing to have "limited potential" mainly because of the difficulties in distinguishing weeds from crops. Johnson et al.[7] investigated two techniques of real-time weed sensing, one using photodetectors, another using machine vision. Photodetector weed sensing technology has difficulty reaching high-resolution levels, whereas machine vision can easily be set at high resolution. With machine vision sensors rather than photodetectors, larger sensing area could be covered for spatial analysis. Weed could be separated from crop by using color and geometric information.

One challenge in outdoor machine vision weed sensing is to overcome variable lighting conditions when using conventional CCD cameras. Much of machine vision weed sensing research has been done with controlled lighting conditions and not much attention has been paid to the issue of real-time operation. Woebbecke et al.[8] studied color indices for weed segmentation with shaded and unshaded plant surfaces presented in the image,

and found that the best segmentation occurred with the modified hue and excessive green contrast index. However, leaf "hole" pixels were created due to converting images from 24-bit to 8-bit color representation. Vegetation image segmentation methods are based on a clustering analysis model[9-10] with adapting to the lighting variation being addressed. In this experimental system, supervised color image segmentation using binary coded genetic algorithm identifying a region in hue-saturation-intensity color space for outdoor field real-time weed sensing was implemented to create a segmentation look-up table.

For weed infestation map-based patch spraying, and for researches requiring weed distribution information as ground truth, a high-resolution weed map is essential. Machine vision-based automated high-resolution weed mapping shows advantages over conventional manual weed counting and statistical model-based weed mapping. Manual counting is labor intensive, resulting in low sampling resolutions and impracticality in covering large field areas. To overcome these limitations, system was integrated into this real-time patch sprayer to generate high-resolution weed maps from geo-referenced video images or directly from the data recorded at real-time operation. This map is useful for next season pre-emergence herbicide application when there are no weeds present. Meanwhile, this high-resolution weed mapping system can be used as a ground truth machine for other weed control guided applications.

For individual nozzle controlled patch-sprayer, criteria like how to set up nozzle control zone, from which individual nozzle control information is obtained by weed sensing, and how to compare the differences between weed density-based and weed infestation area-based thresholding methods, need to be analyzed. Simulation was carried out to provide these fundamental strategies for the patch-sprayer design.

With rapid advancement of computer technologies and reduced cost of imaging sensors, weed sensing in real-time is getting closer to practical reality. Once this new type of patch spraying technology becomes reality, interdisciplinary research among weed scientists, agrochemical experts, agricultural economists and industrial manufactures will be stimulated, and eventually make the technology available for farmers.

OBJECTIVES

There were two objectives in this research. One objective was to develop high resolution weed mapping methodologies based on an experimental real-time weed sensing and spraying control patch-sprayer, and then use generated maps to further justify the patch-spraying concept. Another objective was to analyze how different nozzle control zone sizes and thresholding methods affect patch-sprayer performance.

METHODS AND RESULTS

MACHINE VISION WEED MAPPING

EQUIPMENT

The sprayer used for this work was a Patriot XL (CASE-Tyler Industries Inc., Benson, MN). Sprayer was retrofitted with a sensor boom which allowed placement of two weed mapping cameras (Pulnix TMC-7EX, NTSC output) and one reference camera (Sony model no. XC-003) at height of 3.35m (11 ft) above the ground surface. Cameras were mounted in the nadir position over the crop (Figure 1). Each Pulnix camera sensed across a ten feet width perpendicular to the crop rows. A Sony high-resolution video camera with 12.5-75mm F1.2 zoom lens was used to image an area of one inter-crop region, which was a portion of a Pulnix camera view. Images taken from two different cameras were compared to evaluate weed sensing accuracy of Pulnix camera. Images were imported into a computer through a PXC200 color frame grabber (Imagenation, Beaverton, OR). The sprayer was equipped with a Omnistar differential GPS receiver with sub-meter positioning accuracy and with 1 Hz frequency, which meant one GPS position string per second; and a radar distance sensor with a sampling frequency of 30 pulses per foot.

UNIVERSAL TRANSVERSE MERCATOR (UTM) PROJECTION

GPS strings (NMEA) can provide longitude and latitude coordinates. To obtain distance in plane coordinates from longitude and latitude coordinates, and to derive a function to calculate how GPS coordinates change along with plane coordinates change, a Universal Transverse Mercator (UTM) projection was conducted.

Given a point *P* in longitude l and latitude f, its plane coordinates, *x* and *y*, can be approximated by following equations if the changes in longitude and latitude across any field are sufficiently small (usually less than 1 minute)[11].

$$x = x_0 + K_x(l - l_0) \tag{1}$$

$$y = y_0 + K_y(f - f_0) \tag{2}$$

$$K_x = \frac{a\cos(f_0)}{[1 - e^2\sin^2(f_0)]^{1/2}} \tag{3}$$

$$K_y = \frac{a(1 - e^2)}{[1 - e^2\sin^2(f_0)]^{3/2}} \tag{4}$$

$$b = a(1 - f) \tag{5}$$

$$e = (1 - \frac{b^2}{a^2})^{1/2} \tag{6}$$

Where *a* is the equatorial radius, *b* is the polar radius, and *f* is the flattening of the Earth, respectively. The

exact values of *a*, *b*, and *f* depend on the location on earth. UTM projection is based on the assumption that the earth is ellipsoid. The official ellipsoids used in the United States are: *a*=6,378,135m; *b*=6,356,750.5m; *f*=1/298.26. Coordinates (l_0, f_0) and (x_0, y_0) are the position of a reference point, P_0, in the GPS and plane coordinate system, respectively.

Therefore, any GPS coordinate (l, f) can be transformed to its plane coordinate (x,y) by simply multiplying by constants K_x and K_y, and adding to x_0 and y_0. However the reference point P_0 must be near the field of interesting. In this experiment, reference point P_0 was a benchmark point in University of Illinois, agricultural engineering farm. It had longitude 88.209595778 (west) and latitude 40.072551 (north)

Since cameras were only mounted on left side of sprayer, and GPS receiver was located at the center position of sprayer cab roof, position shifting was necessary for two mapping cameras based on different travel directions. Travel direction was automatically detected using two consecutive GPS positions. Three eight feet long inter-row regions were detected in each image. Each inter-row region was divided into eight sub-areas. Thus, there were 24 sub-areas in one image. To create a weed map, GPS location needs to be assigned to each sub-area. Through linear regression, following linear functions were used to approximate longitude and latitude coordinates changes corresponding to small plane coordinates changes, which were less than several meters in this experiment.

$$\Delta Lat \times 10^5 = 0.8731 \times \Delta Vdist + 0.0673 \qquad (7)$$

$$\Delta Long \times 10^5 = 1.2006 \times \Delta Hdist - 0.0747 \qquad (8)$$

Where *DLong* is longitude coordinate change, *DLat* is latitude coordinate change, *Hdist* is a distance change (in meter) in east-west direction in plane coordinates and *Vdist* is a distance change (in meter) in north-south direction in plane coordinates.

GPS SIGNAL-BASED MAPPING SYSTEM DESIGN

A system that generated high-resolution weed maps from geo-referenced video images using GPS signal was developed on the sprayer-sensing platform (Figure 2). The GPS signal was modulated and recorded on an audio track of the videotape on which the field images were also recorded. Weed infestation data were extracted through image post-processing. GPS information decoded from the tape was used to control the frame-sampling rate and to geo-reference the weed density in image sub-areas. The geo-referenced weed density information from the image post-processing was imported into ArcView software for weed map generation and further analysis. To create the field map, images need to be grabbed once every 8 feet. With 1 Hz GPS signal updating rate, the sprayer was intentionally driven at a low speed around 2 mph (miles per hour) to reduce the image acquisition error gaps, but the system still possibly has 2.9 ft gaps between two consecutive images. Weed density of each sub-area was calculated as vegetation pixel number divided by the area of one-foot long inter-row sub-area after running row detection algorithm. Average density of two connected sub-areas in one inter-row region was output as one data point in weed map. Thus, there were 12 data points from one image.

DISTANCE MEASUREMENT-BASED MAPPING SYSTEM DESIGN

Instead of using recorded GPS signal to post-process video tape of field images, an on-line weed mapping method using real-time radar distance measurement to grab spatially continuous images was developed as well. This method was aimed at generating weed map while sprayer was doing real-time operations.

A Tern TinyDrive (Tern, Inc., Davis CA) 16-bit C/C++ controller was selected as the front stage nozzle controller and used as the system master. The nozzle controller was equipped with a 16-bit microprocessor and supporting hardware. The nozzle controller received control signals from a portable computer and generated control signals that drove the intermittent nozzles and thus controlled the flow rate of the individual nozzles. In addition, the controller measured the period of the square wave output of the vehicle's radar distance sensor.

The real-time patch-sprayer control system (Figure 3) used machine vision to sense weed infestation information between the crop rows, and weed sensing algorithm in a PC to process the images and send application commands to a nozzle controller to control individual nozzles to produce selective application. The Tern nozzle controller counted distance pulses from the radar distance sensor, and directly triggered the PC frame grabber to acquire each new image. In the PC, the main program functioned as trigger waiting-firing loop. When a trigger signal was detected, indicating that the sprayer had traveled a defined distance, the PC reacted by acquiring an image and firing a strobe signal back to the nozzle controller. The strobe signal signified the end of image acquisition, allowing the controller to compensate for the elapsed time as required since the standard video signal was controlled by the synchronized frame rate. More implementation details can be found in reference 12.

Same weed density extraction process was executed as for the previous mapping method. To meet the real-time constraints, weed density data were stored into computer RAM as a link-table while sprayer was doing selective operations. At the end of each path, a weed map file was saved to a disk file. Upon each image grabbing at each 8 ft displacement, the most recent GPS string was imported from serial port. Thereafter, assignments of GPS coordinates to all sub-areas were done within one frame allowable time. This allowable time is defined by sprayer travel speed. A Microsoft Windows-based mapping program was developed to

process images from two cameras. In this experiment, correct weed mapping can be achieved when sprayer's travel speed was below four miles per hour.

WEED SENSING AND CROP ROW DETECTION

The objective of weed sensing in this experiment was to separate weeds from soil and residue. Since it is difficult to separate weeds from crop by color only, a row-detecting algorithm was executed after green vegetation was segmented. A binary coded genetic algorithm was implemented to search an optimal plant region in hue-saturation-intensity space. Sunny and cloudy field image portions were mosaicked to make a training image. This image was hand-segmented and used as a reference image to guide the genetic algorithm's function evaluation. The decoded boundaries for green plant (crop and weed) segmentation were hue (42-129), saturation (23-225) and intensity (43-240) with three HSI components being normalized to 0-255. This boundary set was used to create a look-up table (LUT) by going through all possible red, green and blue combinations. This LUT was used for real-time segmentation[13]. In most cases, crop rows tend to be more saturated than weeds due to relatively denser and larger canopy pattern, leading to different reflectance level for crop as compare to weeds. For every image frame, the 8 ft long field view was separated into 8 slices and processed one by one. This 1 foot step size could overcome row alignment distortion due to unstable travel in rough field conditions. The row locations were stable in one frame and with regular 30 inch row spacing. Saturation channel images were binarized with an experimentally determined threshold value. The threshold value was adjusted by crop row width because when the row became narrow, its average saturation would decrease. The binarized saturation image was scanned column by column and row locations could be detected from the profile. When a good row allocation, i.e., with nearly equal row spacings, was met, the row positions were recorded as the most recent benchmark. This benchmark was updated concurrently with processing. When weed density reached a high level, their saturation differences between crop and weeds would be reduced, and then the benchmark was used. One image segmentation and row detection example is shown in Figure 4. Through this multi-band and adaptive process, crop rows were located. The weed density and coverage area were estimated by calculating the number of pixels, which were segmented as vegetation between the rows.

RESULT FROM HIGH RESOLUTION WEED MAPPING

- Two methods of machine vision-based high-resolution weed mapping were developed based on an experimental patch-sprayer. GPS signal-based off-line mapping method can allow sprayer traveling at higher speed for image collection. The drawbacks of this method were that mapping accuracy depended on GPS signal frequency and need post-processing. A weed map created using GPS signal-based mapping method is showing in Figure 5. Radar distance measurement-based weed mapping is more efficient than GPS signal-based method. However this method needs to meet real-time operation constraints.
- Weed detection results from mapping sensor and reference sensor were compared. Weed sensing results could be acceptable across different sensor resolutions. As shown in Table 1, weed infestation area detected in 8 ft long inter-crop-row region from high and low resolution cameras were nearly equal. High resolution Sony camera was able to discern small 'greenish' object, which could be tiny weeds or noises from soil. Low-resolution Pulnix camera missed small objects, but detected majority of weed components existed in the image. Sensor resolution can always be improved if sensor cost is not a concern.

Table 1. Comparison of weed detection from high and low resolution images.

	Sony Camera ($4mm^2$/pixel)	Pulnix Camera ($25mm^2$/pixel)
Sum of weed area	103.1 in^2	110.6 in^2
Samples of weed objects	1223	147

- Patchy weed distributions were observed in the high-resolution weed map. In Figure 6 and 7, low weed density areas dominate the distribution.
- From the weed map and resulting statistics, weed distribution variation due to different tillage and treatment combinations was observed (Figure 8). This result provided evidence that this system is a useful sampling tool for weed distribution research.
- This work showed that selective and variable-rate herbicide application methods had advantages over uniform application method. The variable rate method had greater advantages when the weed density variation was high. In Table 2, proposed variable application rate is listed. Potential herbicide savings from comparing on/off and variable rate applications with uniform application are illustrated in Table 3, where single threshold (ST) for on/off application was set at weed density of 1% and variable rate was set to four levels as in Table 2.

Table 2. Proposed variable application rate (VAR)

Weed density(%)	0-1	1-2	2-10	>10
Application rate(%)	0	33	66	100

Table 3. Percentage of herbicide could be saved over uniform application method.

	H_CT_T* STD***=0.18	L** STD=0.05
ST****	6%	52%
VR*****	18%	71%
Ratio of VR/ST	3	1.36

* Plots with high weed density and specifically with conventional tillage and total broadleaf and grass pre-emergence control
** Plots with low weed density for all tillage and weed control combinations
*** Standard deviation of weed density
**** Single threshold application method
***** Variable rate application method

PATCH-SPRAYING SIMULATION FOR CONTROL ZONE SIZE AND THRESHOLD METHODS ANALYSIS

MATERIALS AND METHOD

In total, 105 randomly sampled high-resolution (1mm^2 per pixel) images of soybean and corn fields were processed by applying six different sampling grids ranging in size from 1 ft by 1ft to 2 ft by 2 ft. Images were taken using a camcorder (Panasonic 3CCD Digital Video Camcorder, AG-EZ1) in Summer 1997. Images were imported into a computer through a PXC200 color frame grabber, which was the same as what used in weed mapping. Simulation software was written in Microsoft Visual C++ 5.0 and Image-Pro Plus 3.0 (Media Cybernetics, Silver Spring, MD) Macro language. For each sample image, the initial inter-row region start point was manually defined and saved in a file. In later batch processing, all sampling grids were started at this predefined point. Weed distributions were plotted and analyzed with respect to these sampling grids. Weed-free areas at different threshold levels were calculated both by weed density and weed area threshold methods. The result of this analysis demonstrated how different control zone sizes and threshold methods affect selective patch-sprayer performance.

The nozzle control zone size used here is not necessarily equal to the area covered by one spray nozzle. The width of individual nozzle controlled area is equal to the effective nozzle sprayed width, which is a constant. In this simulation, control zone width meant the width of inter-row weed sensing region, which could be varied by crop situation as shown in row detection section. However, the control zone length parallel to the row direction is a matter of design choice. The nozzle control zone analysis here is therefore a valid guideline for system design.

PATCH-SPRAYING SIMULATION RESULT

- Based on the weed detection from the images in this randomly sampled data set, the weed distributions were best approximated by the negative binomial, which were coincident with some other weed distribution researches[2,14,15]. As showing in Figure 9, more than 80 percent of the control zones had less than 20 percent weed coverage.
- For density-based thresholds, smaller control zones enabled detection of more weed-free areas at weed densities lower than 3 percent. However, at weed densities above 3 percent, larger control zones were able to detect more weed-free areas (Figure 10). This phenomenon indicated that weed-free area detection is directly related to the selection of nozzle control zone size when using weed density as threshold. In fact, this result more likely meant that some large weed clumps were missed when nozzle control zone size increased. The differences among different zone sizes were relatively small when weed density threshold was below 3 percent in this simulation.
- With weed infestation area as the threshold for weed detection, smaller control zone sizes increased the weed-free areas detected (Figure 11).

A smaller control zone size requires higher delivery accuracy from a patch-spraying system. Though larger nozzle control zone sizes generate more weed-free areas when weed density threshold is higher than 3 percent in this simulation, it does not mean larger nozzle control zone size is preferable than smaller size for better weed control. The weed infestation area-based thresholding method seems to be straightforward. For both density and area-base on/off spraying thresholding methods, smaller nozzle control zone size is superior to larger control zone size indeed. However, nozzle control zone size can never go beyond the system limitations. An optimal zone size probably exists based on economic considerations since the cost of a selective sprayer is a function of zone size[16]. Nevertheless, if we consider only the design constraints in the direction along the crop rows, the best control zone size is dependent on the maximum control resolution, the delays introduced because of the asynchronous nature of the system, and the dynamic response of the nozzle control valves. For either type of thresholding methods, thresholds need to be standardized through comprehensive experiments.

CONCLUSION

Based on an experimental machine vision-based real-time patch-sprayer, GPS signal-based and radar distance measurement-based high-resolution weed mapping techniques were developed and verified to be efficient weed mapping tools. These mapping tools were important for map-based site-specific weed management, and could be widely used as a ground truth machine for other weed control researches and experiments. Based on the requirement for a real-time patch-sprayer design, nozzle control zone size and on/off application thresholding methods were analyzed using a patch-spraying simulation model. Fundamental system design strategies were obtained from the simulation.

ACKNOWLEDGMENTS

This research was supported by the Illinois Council on Food and Agricultural Research (C-FAR). Project No. 99I-112-3.

CONTACT

Lei F. Tian
1304 W. Pennsylvania Ave.
124 AESB, Agricultural Engineering Department
University of Illinois at Urbana-Champaign
Urbana, IL 61801
E-mail: lft@sugar.age.uiuc.edu

REFERENCES

1. Stafford, J.V. and P.C.H. Miller. 1993. Spatially selective application of herbicide to cereal crops. *Computers and Electronics in Agriculture* 9(3):217-229.
2. Mortensen, D. A., G. A. Johnson, and L. Y. Young. 1993. Weed distribution in agricultural fields. In *Soil Specific Crop Management,* eds. P. C. Roberts, R. H. Rust, and W. E. Larson, 113-124. Madison, WI: ASA-CSSA-SSSA.
3. Wilson, B. J. and P. Brain. 1991. Long-term stability of distribution of *Alopecurus myosuroides* Huds. within cereal fields. *Weed Research* 31(6):367-373.
4. Winkle, M.E., J.R.C. Leavitt, and O.C. Burnside. 1981. Effect of weed density on herbicide absorption and bioactivity. *Weed Science.* 29:405-409
5. Williams, M.M.II, R. Gerhards, S. Reichart, D.A. Mortensen, and Martin, A.R. 1998. Weed seedling population responses to a method of site-specific weed management. In *Proceedings of the Fourth International Conference on Precision Agriculture*, Mardison, Wisconsin, USA-CSA-SSA (in press).
6. Paice, M. E. R., P. C. H. Miller, and J. D. Bodle. 1995. An experimental sprayer for the spatially selective application of herbicides. *Journal of Agricultural Engineering Research* 60(2):107-116.
7. Johnson, G. A., J. Cardina, and D. A. Mortensen. 1997. Site-specific weed management: current and future directions. In *The State of Site-specific Management in Agriculture*, eds. F. J. Pierce and E. J. Sadler, 131-148. Madison, Wisc.: ASA-CSSA-SSSA.
8. Woebbecke, D. M., G. E. Meyer, K. Von Bargen, and D. A. Mortensen. 1995a. Color indices for weed identification under various soil, residue, and lighting conditions. *Transactions of ASAE* 38(1):259-269.
9. Tian, L., D.C. Slaughter, and R.F. Norris. 1997. Outdoor field machine vision identification of tomato seedlings for automated weed control. *Transactions of the ASAE* 40(6):1761-1768.
10. Steward, B.L. and L. F. Tian. 1998. Real-time weed detection in outdoor field conditions. In *Proc. SPIE 3543, Precision Agriculture and Biological Quality*, eds. J. A . DeShazer and G. E. Meyer, 266-278. Bellingham, WA.:SPIE.
11. Han, S.F., 1992. A field information system for site-specific crop management. Ph.D. dissertation, Appendix A.. Library of University of Illinois at Urbana-Champaign, Urbana, IL.
12. Steward, B.L., 1999. Sensing and control for real-time machine vision-based selective herbicide application under outdoor field conditions. Ph.D. dissertation, chapter 5. Library of University of Illinois at Urbana-Champaign, Urbana, IL.
13. Tang, L., L.F., Tian, B.L., Steward and J.F., Reid. 1999. Supervised color image segmentation by genetic algorithm for real-time weed sensing in outdoor lighting conditions. In review.
14. Cardina, J., G. A. Johnson and D. H. Sparrow. 1997. The nature and consequence of weed spatial distribution. *Weed Science*. 45:364-373.
15. Davis, P. M. 1994. Statistics for describing populations. In: Handbook of Sampling Methods for Arthropods in Agriculture. G. D. Buntin and L. P. Pedigo (Eds). CRC Press, Boca Raton, FL. pp 38-40.
16. Paice, M. E. R., P. C. H. Miller, and W. Day. 1996. Control requirements for spatially selective herbicide sprayers. *Computers and Electronics in Agriculture* 14(2-3):163-177.

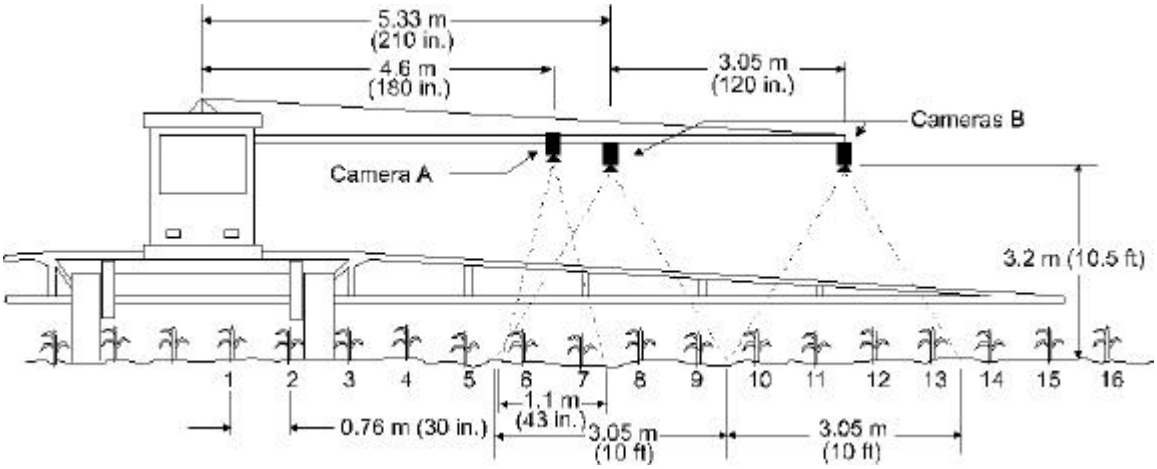

Figure 1: Patch-sprayer front view. Camera of type A was the Sony XC-003 camera used to collect high resolution reference images. Cameras of type B were Pulnix cameras used for weed mapping.

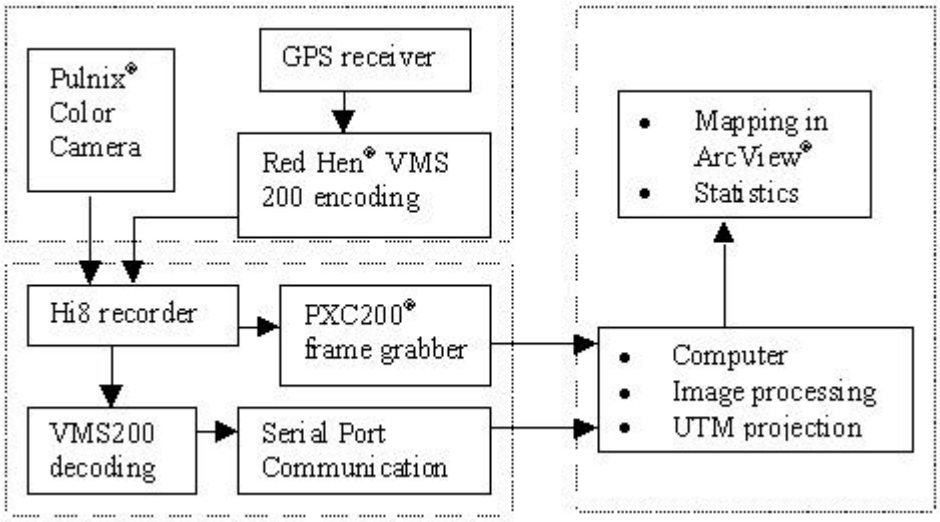

Figure 2: Diagram of GPS-based machine vision weed mapping system.

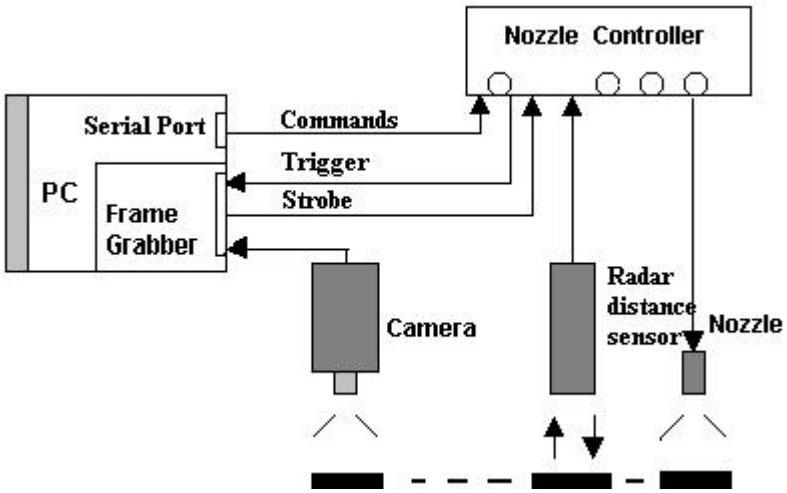

Figure 3: Diagram of image grabbing mechanism of radar distance measurement-based machine vision weed mapping system.

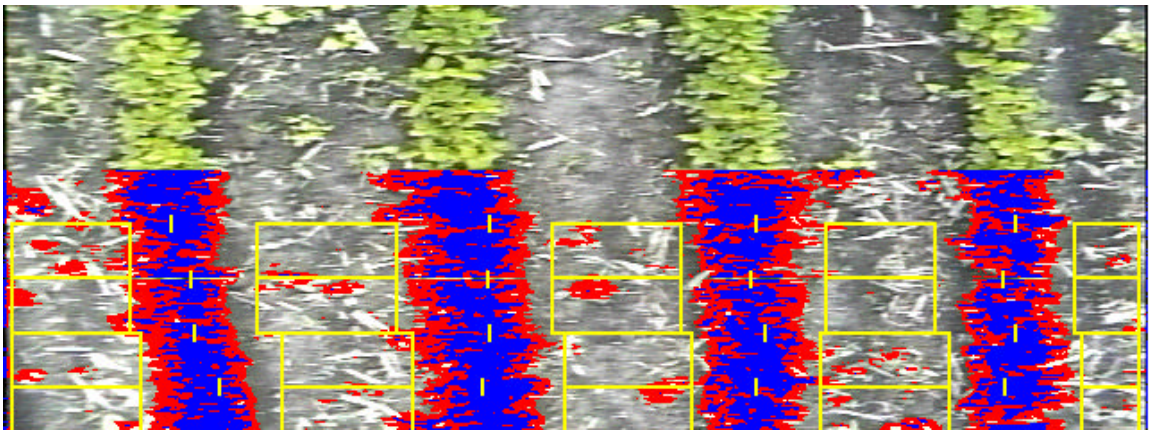

Figure 4: Weed sensing and row detection.

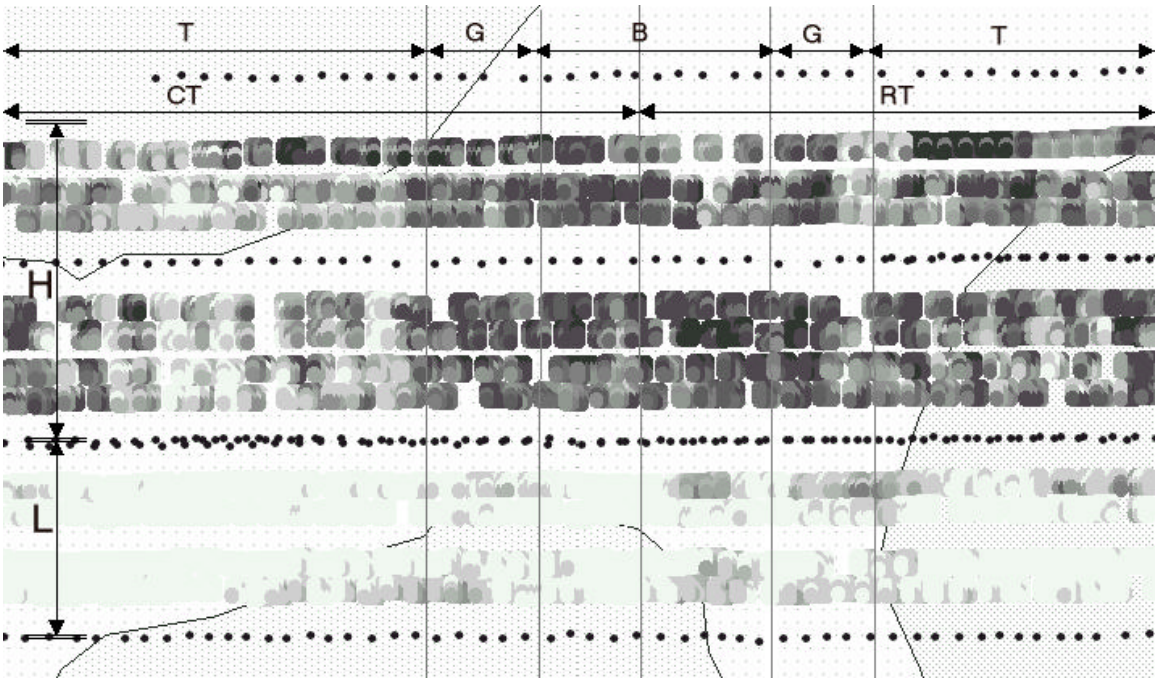

Figure 5: High resolution machine vision weed map created at July 9, 1998. (T: total herbicide treatment. G: grass herbicide treatment. B: broadleaf herbicide treatment. CT: conventional tillage. RT: reduced tillage. H: high weed density plots. Soybeans were planted on June 2, 1998. L: low weed density plots. Soybeans were planted on June 25, 1998. In this map, with the pixel gray level changing from light to dark, weed density increases.)

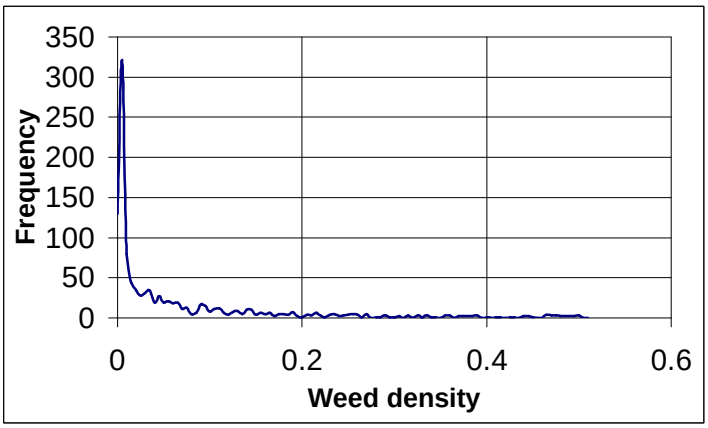

Figure 9: Weed distribution with control zone size 1 ft by 1ft.

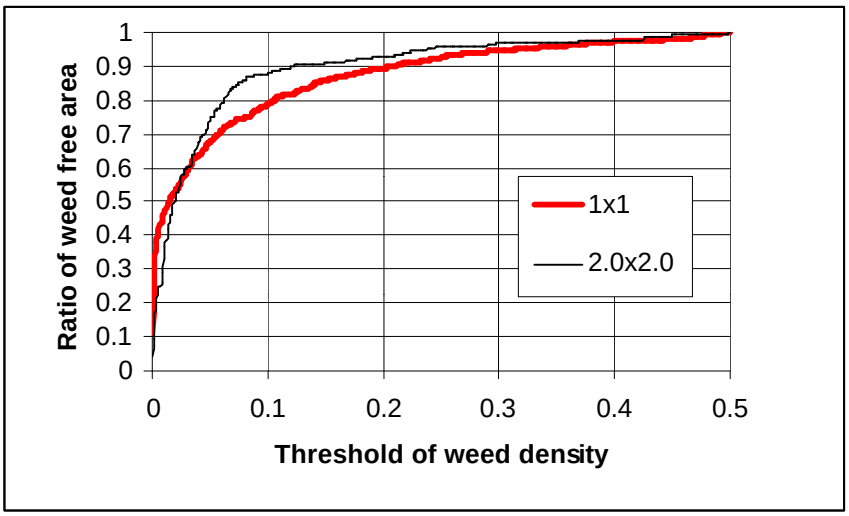

Figure 10: Ratio of weed free areas versus threshold of weed density with control zone size 1 ft bv 1ft and 2 ft bv 2 ft.

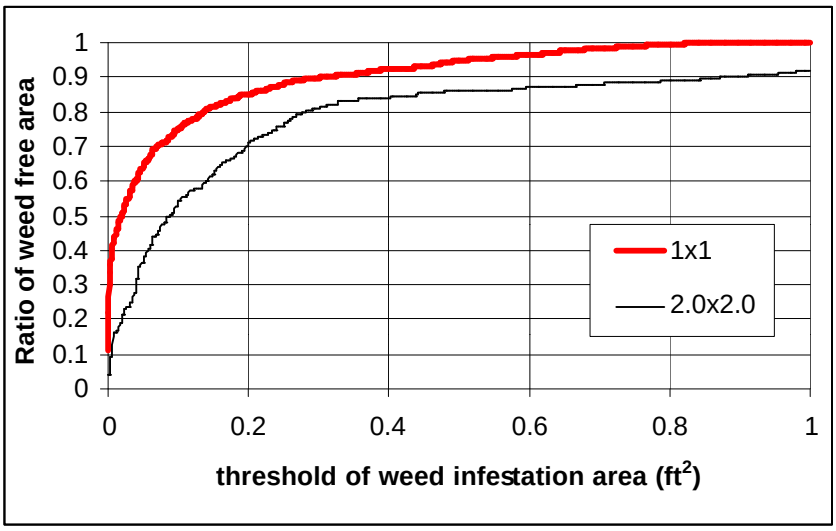

Figure 11: Ratio of weed free areas versus threshold of weed infestation area with control zone size 1 ft bv 1ft and 2 ft bv 2 ft.